Material Properties (PE100)

Material Data

The following table lists typical physical properties of Polyethylene thermoplastic materials.Variations may exist depending on specific compounds and product

PHYSICAL PROPERTIES		Typical Value	Unit	Test Method
Density	(Base resin)	949	Kg/m^3	ISO 1183/ISO 1872-2B
Density	(Compound)	959	Kg/m^3	ISO 1183/ISO 1872-2B
Melt Flow Rate	(190°C/2.16kg)	<0.1	g/10min	ISO 1133
Melt Flow Rate	(190°C/5.0kg)	0.25	g/10min	ISO 1133
Tensile Stress at Yield	50mm/min	25	Mpa	ISO 527-2
Elongation at Break		>600	%	ISO 527-2
Charpy impact, notched	(0°C)	16	KJ/m^2	ISO 179/1eA
Hardness, Shore D		60	-	ISO 868
Carbon Black Content		≥2	%	ASTM D 1603
Brittleness Temperature		<-70	°C	ASTM D 746
ESCR	(10% Igepal), F_{50}	>10000	h	ASTM D 1693-A
Thermal Stability	(210°C)	>15	min	EN 728



Mechanical Properties

Allowable working pressure for PE 100 pipes according to DIN 8074 with safety factor of 1.25

Allowable working pressure for pipes made from PE 100, conveying water, with a safety factor of 1.25

Temperature, in °C	Years of service	Pipes series													
		25	20	16	12.5	10.5	10	8.3	8	6.3	5	4	3.2	2.5	2
		Standard dimension (SDR)													
		51	41	33	26	22	21	17.6	17	13.6	11	9	7.4	6	5
		Allowable working pressure													
10	5	4.0	5.0	6.3	7.9	9.4	10.1	12.1	12.6	15.7	20.2	25.2	31.5	40.4	50.5
	10	3.9	4.9	6.2	7.8	9.3	9.9	11.9	12.4	15.5	19.8	24.8	31.0	39.7	49.6
	25	3.8	4.8	6.0	7.6	9.0	9.6	11.6	12.1	15.1	19.3	24.2	30.2	38.7	48.4
	50	3.8	4.7	5.9	7.5	8.9	9.5	11.4	11.9	14.8	19.0	23.8	29.7	38.0	47.6
	100	3.7	4.6	5.8	7.3	8.7	9.3	11.2	11.6	14.6	18.7	23.3	29.2	37.4	46.7
20	5	3.3	4.2	5.3	6.6	7.9	8.4	10.2	10.6	13.2	16.9	21.2	26.5	33.9	42.4
	10	3.3	4.1	5.2	6.5	7.8	8.3	10.0	10.4	13.0	16.6	20.8	26.0	33.3	41.6
	25	3.2	4.0	5.0	6.4	7.6	8.1	9.8	10.1	12.7	16.2	20.3	25.4	32.5	40.7
	50	3.2	4.0	5.0	6.3	7.5	8.0	9.6	10.0	12.5	16.0	20.0	25.0	32.0	40.0
	100	3.1	3.9	4.9	6.1	7.3	7.8	9.4	9.8	12.2	15.7	19.6	24.5	31.4	39.2
30	5	2.8	3.6	4.5	5.6	6.7	7.2	8.6	9.0	11.2	14.4	18.0	22.5	28.8	36.0
	10	2.8	3.5	4.4	5.5	6.6	7.0	8.5	8.8	11.0	14.1	17.7	22.1	28.3	35.4
	25	2.7	3.4	4.3	5.4	6.4	6.9	8.3	8.6	10.8	13.8	17.2	21.6	27.6	34.5
	50	2.7	3.3	4.2	5.3	6.3	6.7	8.1	8.4	10.6	13.5	16.9	21.2	27.1	33.9
40	5	2.4	3.0	3.8	4.8	5.8	6.1	7.4	7.7	9.6	12.3	15.4	19.3	24.7	30.9
	10	2.4	3.0	3.8	4.7	5.7	6.0	7.3	7.6	9.5	12.1	15.2	19.0	24.3	30.4
	25	2.3	2.9	3.7	4.6	5.5	5.9	7.1	7.4	9.2	11.8	14.8	18.5	23.7	29.7
	50	2.3	2.9	3.6	4.5	5.4	5.8	7.0	7.2	9.1	11.6	14.5	18.2	23.3	29.1
50	5	2.1	2.6	3.3	4.2	5.0	5.3	6.4	6.7	8.3	10.7	13.4	16.7	21.4	26.8
	10	2.0	2.6	3.2	4.0	4.8	5.2	6.2	6.5	8.1	10.4	13.0	16.2	20.3	26.0
	15	1.9	2.3	2.9	3.7	4.4	4.7	6.7	5.9	7.4	9.5	11.8	14.8	19.0	23.7
60	5	1.5	1.9	2.4	3.0	3.6	3.8	4.6	4.8	6.0	7.7	9.7	12.1	15.5	19.4
70	2	1.2	1.5	1.9	2.4	2.9	3.1	3.7	3.9	4.9	6.2	7.8	9.8	12.5	15.7



Allowable working pressure for PE 100 pipes according to DIN 8074with safety factor of 1.6

Allowable working pressure for pipes made from PE 100, conveying water, with a safety factor of 1.6

Tem-pera-ture,in °C	Years of service	Pipes series													
		25	20	16	12.5	10.5	10	8.3	8	6.3	5	4	3.2	2.5	2
		Standard dimension (SDR)													
		51	41	33	26	22	21	17.6	17	13.6	11	9	7.4	6	5
		Allowable working pressure													
10	5	3.1	3.9	4.9	6.3	7.5	7.8	9.5	9.8	12.5	15.7	19.7	24.2	31.5	39.4
	10	3.1	3.8	4.8	6.2	7.3	7.7	9.3	9.6	12.3	15.5	19.3	23.8	31.0	38.7
	25	3.0	3.8	4.7	6.0	7.2	7.5	9.1	9.4	12.0	15.1	18.9	23.3	30.2	37.8
	50	2.9	3.7	4.6	5.9	7.0	7.4	8.9	9.3	11.8	14.8	18.6	22.8	29.7	37.2
	100	2.9	3.6	4.5	5.8	6.9	7.3	8.8	9.1	11.6	14.6	18.2	22.4	29.2	36.5
20	5	2.6	3.3	4.1	5.3	6.3	6.6	7.9	8.2	10.5	13.2	16.5	20.4	26.5	33.1
	10	2.6	3.2	4.0	5.2	6.2	6.5	7.8	8.1	10.3	13.0	16.2	20.0	26.0	32.5
	25	2.5	3.1	3.9	5.0	6.0	6.3	7.6	7.9	10.0	12.7	15.9	19.5	25.4	31.8
	50	2.5	3.1	3.9	5.0	5.9	6.2	7.5	7.8	9.9	12.5	15.6	19.2	25.0	31.2
	100	2.4	3.0	3.8	4.9	5.8	6.1	7.3	7.6	9.7	12.2	15.3	18.8	24.5	30.6
30	5	2.2	2.8	3.5	4.5	5.3	5.6	6.7	7.0	8.9	11.2	14.0	17.3	22.5	28.1
	10	2.2	2.7	3.4	4.4	5.2	5.5	6.6	6.9	8.7	11.0	13.8	17.0	22.1	27.6
	25	2.1	2.7	3.3	4.3	5.1	5.4	6.5	6.7	8.5	10.8	13.5	16.6	21.6	27.0
	50	2.1	2.6	3.3	4.2	5.0	5.3	6.3	6.6	8.4	10.6	13.2	16.3	21.2	26.5
40	5	1.9	2.4	3.0	3.8	4.6	4.8	5.8	6.0	7.6	9.6	12.0	14.8	19.3	24.1
	10	1.9	2.3	2.9	3.8	4.5	4.7	5.7	5.9	7.5	9.5	11.8	14.6	19.0	23.7
	25	1.8	2.3	2.9	3.7	4.4	4.6	5.5	5.8	7.3	9.2	11.6	14.2	18.5	23.2
	50	1.8	2.2	2.8	3.6	4.3	4.5	5.4	5.6	7.2	9.1	11.3	14.0	18.2	22.7
50	5	1.6	2.0	2.6	3.3	3.9	4.1	5.0	5.2	6.6	8.3	10.4	12.8	16.7	20.9
	10	1.6	2.0	2.5	3.2	3.8	4.0	4.8	5.0	6.4	8.1	10.1	11.4	16.2	20.3
	15	1.4	1.8	2.3	2.9	3.5	3.7	4.4	4.6	5.8	7.4	9.2	11.4	14.8	18.5
60	5	1.2	1.5	1.9	2.4	2.8	3.0	3.6	3.8	4.8	6.0	7.6	9.3	12.1	15.2
70	2	0.9	1.2	1.5	1.9	2.3	2.4	2.9	3.0	3.8	4.8	6.1	7.5	9.8	12.2



Allowable working pressure for PE 100 pipes according to DIN 8074 with safety factor of 2.0

Allowable working pressure for pipes made from PE 100, conveying water, with a safety factor of 2.0

Temperature, in °C	Years of service	Pipes series													
		25	20	16	12.5	10.5	10	8.3	8	6.3	5	4	3.2	2.5	2
		Standard dimension (SDR)													
		51	41	33	26	22	21	17.6	17	13.6	11	9	7.4	6	5
		Allowable working pressure													
10	5	2.5	3.1	3.9	5.0	6.0	6.3	7.6	7.8	10.0	12.6	15.7	19.4	25.2	31.5
	10	2.4	3.1	3.8	4.9	5.9	6.2	7.4	7.7	9.8	12.4	15.5	19.0	24.8	31.0
	25	2.4	3.0	3.7	4.8	5.7	6.0	7.3	7.5	9.6	12.1	15.1	18.6	24.2	30.2
	50	2.3	2.9	3.7	4.7	5.6	5.9	7.1	7.4	9.4	11.9	14.8	18.3	23.8	29.7
	100	2.3	2.9	3.6	4.6	5.5	5.8	7.0	7.3	9.2	11.6	14.6	17.9	23.3	29.2
20	5	2.1	2.6	3.3	4.2	5.0	5.3	6.3	6.6	8.4	10.6	13.2	16.3	21.2	26.5
	10	2.0	2.6	3.2	4.1	4.9	5.2	6.2	6.5	8.2	10.4	13.0	16.0	20.8	26.0
	25	2.0	2.5	3.1	4.0	4.8	5.0	6.1	6.3	8.0	10.1	12.7	15.6	20.3	25.4
	50	2.0	2.5	3.1	4.0	4.7	5.0	6.0	6.2	7.9	10.0	12.5	15.3	20.0	25.0
	100	1.9	2.4	3.0	3.9	4.6	4.9	5.9	6.1	7.7	9.8	12.2	15.1	19.6	24.5
30	5	1.8	2.2	2.8	3.6	4.2	4.5	5.4	5.6	7.1	9.0	11.2	13.8	18.0	22.5
	10	1.7	2.2	2.7	3.5	4.2	4.4	5.3	5.5	7.0	8.8	11.0	13.6	17.7	22.1
	25	1.7	2.1	2.7	3.4	4.1	4.3	5.2	5.4	6.8	8.6	10.8	13.6	17.2	21.6
	50	1.6	2.1	2.6	3.3	4.0	4.2	5.1	5.3	6.7	8.4	10.6	13.0	16.9	21.2
40	5	1.5	1.9	2.4	3.0	3.6	3.8	4.6	4.8	6.1	7.7	9.6	11.9	15.4	19.3
	10	1.5	1.9	2.3	3.0	3.6	3.8	4.5	4.7	6.0	7.6	9.5	11.6	15.2	19.0
	25	1.4	1.8	2.3	2.9	3.5	3.7	4.4	4.6	5.8	7.4	9.2	11.4	14.8	18.5
	50	1.4	1.8	2.2	2.9	3.4	3.6	4.3	4.5	5.7	7.2	9.1	11.2	14.5	18.2
50	5	1.3	1.6	2.0	2.6	3.1	3.3	4.0	4.1	5.3	6.7	8.3	10.3	13.4	16.7
	10	1.3	1.6	2.0	2.6	3.0	3.2	3.9	3.0	5.1	6.5	8.1	10.0	13.0	16.2
	15	1.1	1.4	1.8	2.3	2.8	2.9	3.5	3.7	4.7	5.9	7.4	9.1	11.8	14.8
60	5	0.9	1.2	1.5	1.9	2.3	2.4	2.9	3.0	3.8	4.8	6.0	7.4	9.7	12.1
70	2	0.7	0.9	1.2	1.5	1.8	1.9	2.3	2.4	3.1	3.9	4.9	6.0	7.9	9.8



Mechanical Properties

Modern PE100 grades show a bimodal molecular weight distribution, i.e.:they consist of two different kinds of molecular chains (short and long). These polyettrylenes combine a high tensile strength with a high resistance against fast and slow crack propagation
PE also shows a very high impact resistance throughout its entire temperature range.

Creep under internal pressure

One of the most important methods of verifying the service Life of PE pipes are to determine creep under intemal pressure also referred to simply as "creep".

Even after 100 years of a continueus service temperature of 20 C no thermo axidative processes will occur in PE BO or PE 100 pipes (see chart) The tests conducted within this area provide comparative data used for the purpose of design/sizing pipes to be esposed to tustained loading (up to 100 years).

Time-dependent modulus of elasticity (creep modulus) Data relating to the modulus of elasticity is essential when it comes to performing stability analyses, eg in the case of buried pipes exposed to soil loads, live loads or groundwater, In the case of pipes made of thermoplastic materials, the time-dependent modulus of elasticity is of particular importance Scientific tests and practical experience have provided long-term dimensional pararneters ensuring that the design of the piping systerm is technicaly sound and suitable for sustained operation. (fig.2)...

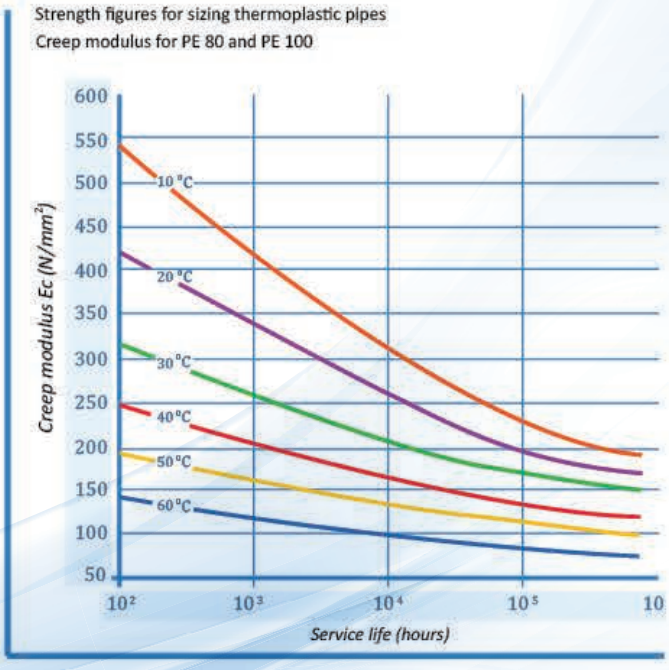

(fig.2)

Expansion/Contraction

Allowing for Length Changes in PE Pipelines

Variations in temperature cause greater length changes in thermoplastic materials than in metals. In the case of above ground, wall or duct mounted pipe work, particularly where subjected to varying working temperatures, it is necessary to make suitable provision for length changes in order to prevent additional stresses (fig3).

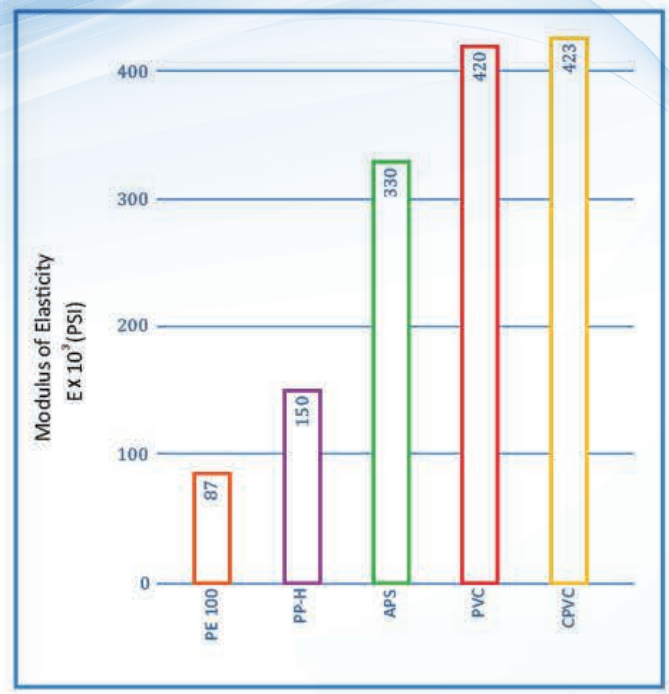

(fig.3)



HDPE Spigot Fittings

d	SDR	L	Z	e	kg
75	SDR11	63	94	6.8	0.27
90	SDR11	65	99.5	8.2	0.39
110	SDR11	66	110	10	0.62
125	SDR11	73	142.9	11.4	0.96
160	SDR11	76	135	14.6	1.51
200	SDR11	100	170	18.2	2.75
250	SDR11	100	185	22.7	5.00
315	SDR11	105	220	28.6	8.60
450	SDR11	110	270	40.9	21.14
500	SDR11	115	275	45.4	26.80
560	SDR11	120	290	50.8	32.90

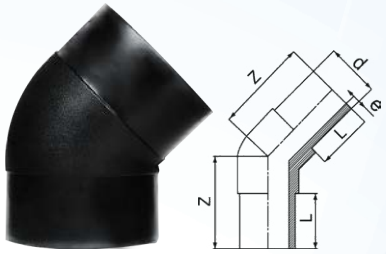

Elbow 45 °

d	SDR	L	Z	e	kg
40	SDR11	50	82	3.7	0.74
63	SDR11	67	105	6.2	0.30
75	SDR11	64	108.5	6.8	0.32
90	SDR11	67	110	8.2	0.52
110	SDR11	80	127.5	10	0.84
125	SDR11	70	135	11.4	1.14
160	SDR11	99	147.5	14.6	1.90
200	SDR11	105	200	18.2	3.77
250	SDR11	111	220	22.7	6.89
315	SDR11	118.6	255	28.6	13.18
400	SDR11	180	345	36.3	29.54
450	SDR11	110	425	40.9	40.90
500	SDR11	110	345	45.4	49.20
560	SDR11	110	525	50.8	55.36

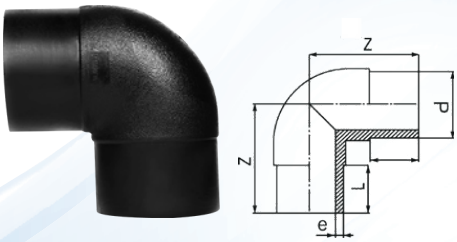

Elbow 90 °

d	SDR	L	L1	Z	e	kg
50	SDR11	106	58	207	4.6	0.20
63	SDR11	110	67	225	5.8	0.42
75	SDR11	107	71	222	6.8	0.46
90	SDR11	118.5	78	247	8.2	0.70
110	SDR11	139.5	92	298	10	1.19
125	SDR11	156	98	315	11.4	1.64
160	SDR11	179.5	99	326.5	14.6	2.75
200	SDR11	222.9	118	435	18.2	5.74
250	SDR11	226.5	115	490	18.4	8.00
315	SDR11	229.3	134.2	570	23.2	16.58
400	SDR11	384	165	770	36.3	35.50
450	SDR11	330	110	715	40.9	40.90

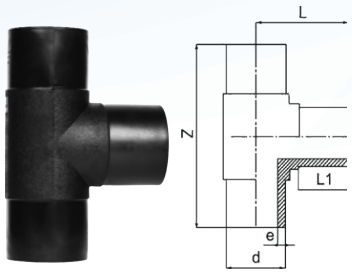

Equal Tee



HDPE Spigot Fittings

Stubend

d	SDR	Z	L1	L	kg
40	SDR11	82.5	15	55	0.80
50	SDR11	81	15	64	0.13
63	SDR11	96	17	72	0.21
75	SDR11	120	16	80	0.28
90	SDR11	90	15	72	0.35
110	SDR11	110	16	87	0.54
160	SDR11	122	21.2	94.6	1.53
200	SDR11	135	25	110	2.48
225	SDR11	175	30	100	2.26
250	SDR11	150	32	110	3.89
315	SDR11	187	43	135	7.04
400	SDR11	130	85	110	14.64
450	SDR11	217	54	150	15.90
500	SDR11	235	60	149	21.00
560	SDR11	220	50	144	28.00
630	SDR11	245	71	143	29.72



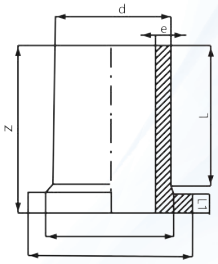

Reducing Cross Tee

Dn	Dn1	H	H 1	Z	Z1	Kg
110	63	75	69	241	265	0.82



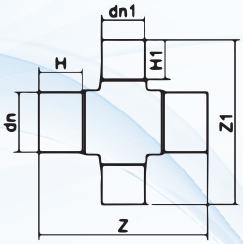



HDPE Spigot Fittings

d1-d2	SDR	Z	Z1	L	kg
50*32	SDR11	208	107	61	0.18
63*50	SDR11	221	112	63	0.27
75*40	SDR11	228	95	64	0.37
75*50	SDR11	228	95	64	0.38
75*63	SDR11	228	96.2	64	0.82
90*50	SDR11	254	115	64	0.57
90*63	SDR11	254	116	66	0.60
90*75	SDR11	254	118	66	0.63
110*50	SDR11	222	125	66.5	0.69
110*63	SDR11	222	136	66.5	0.72
110*75	SDR11	305	133	82	1.05
110*90	SDR11	305	134	82	1.03
160*63	SDR11	285	158	70	1.86
160*75	SDR11	285	168	70	1.88
160*90	SDR11	285	173	70	1.92
160*110	SDR11	285	182	70	1.98
200*63	SDR11	350	180	100	3.62
200*75	SDR11	350	190	100	3.65
200*90	SDR11	350	198	100	3.30
200*110	SDR11	350	200	100	3.88
200*160	SDR11	445	208	100	5.28
250*90	SDR11	495	230	97	8.54
250*110	SDR11	495	230	97	8.32
250*160	SDR11	485	280	100	7.10
250*200	SDR11	494	280	100	7.40
315*90	SDR11	370	290.5	105	7.51
315*110	SDR11	465	255	105	7.53
315*160	SDR11	465	265	115	10.05
315*200	SDR11	465	285	115	10.15
315*250	SDR11	578	283	100	12.98
400*110	SDR11	505	300	80	20.65
400*160	SDR11	560	317	98	22.30
400*200	SDR11	600	330	110	24.90
400*250	SDR11	645	345	130	27.02
400*315	SDR11	680	365	150	29.30
450*110	SDR11	720	345	110	36.60
450*160	SDR11	720	350	110	36.40
450*200	SDR11	720	365	110	37.68
450*250	SDR11	720	350	110	37.00
450*315	SDR11	720	340	110	37.40
450*400	SDR11	720	360	110	38.90

Reduced Tee



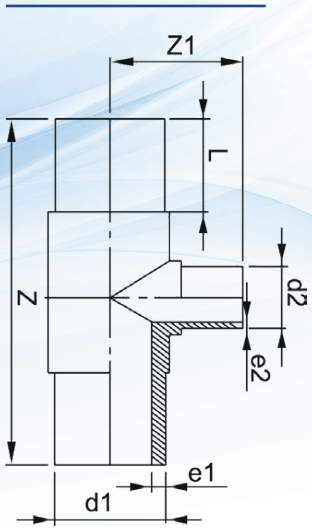



HDPE Spigot Fittings

End Cap

D	SDR	L	A	Kg
40	SDR11	48.58	3.6	0.30
50	SDR11	49.22	4.5	0.60
63	SDR11	82	6.5	0.12
75	SDR11	70	6.8	0.14
90	SDR11	79	8.2	0.24
110	SDR11	92	10.6	0.44
160	SDR11	129	14.6	1.18
200	SDR11	125	19.6	1.88
250	SDR11	110.6	22.9	2.64
315	SDR11	150	28.6	6.20
400	SDR11	178	23.7	11.23
450	SDR11	100	26.7	9.68
500	SDR11	104	29.7	14.10
560	SDR11	102	33.2	13.78
630	SDR11	98	37.4	18.22

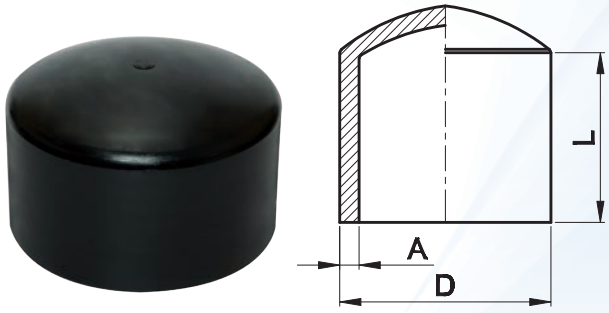

HDPE Water Distributor

DN	63x20	63x 20
L75	750	980
Holes	5	8
Distance of Holes	150	130
Weight	920	1220

All dimensions are in mm.
WEIGHT : G
PRESSURE : PN16





HDPE Spigot Fittings

Reducer

d1-d2	SDR	Z	L1	L2	e1	e2	kg
63*32	SDR11	152	63	67	2.9	5.8	0.13
90*32	SDR11	157	78	50	8.2	2.9	0.26
90*40	SDR11	147.5	76	57	8.2	3.7	0.20
90*50	SDR11	142	82	59	8.2	4.6	0.22
90 63	SDR11	152	82	68	8.2	5.8	0.25
90*75	SDR11	155	82	72	8.2	6.8	0.28
110*50	SDR11	153	83	62	10.0	4.6	0.31
110*63	SDR11	162	83	70	10.0	5.8	0.35
110*75	SDR11	162	83	71	10.0	6.8	0.40
110*90	SDR11	167	83	77	10.0	8.2	0.44
125 75	SDR11	167	84	71	11.4	6.8	0.52
125*90	SDR11	167	84	76	11.4	8.2	0.55
125*110	SDR11	164	84	79.5	11.4	10.0	0.62
160*63	SDR11	182	92	67	14.6	5.8	0.76
160 75	SDR11	184	92	87	14.6	6.8	0.80
160*90	SDR11	185	92	89	14.6	8.2	0.83
160*110	SDR11	187	92	89	14.6	10.0	0.91
160*125	SDR11	192	92	90	14.6	11.4	1.01
200 63	SDR11	185	97	60	18.2	5.8	1.35
200*75	SDR11	190	91	65	18.2	6.8	1.38
200*90	SDR11	195	96	73	18.2	8.2	1.41
200*110	SDR11	197	97	77	18.2	10.0	1.48
200*160	SDR11	201	96	91	18.2	14.6	1.82
250*63	SDR11	223	98	74	22.7	5.8	2.25
250*75	SDR11	210	98	85	22.7	6.8	2.26
250*90	SDR11	225	98	90	22.7	8.2	2.34
250*110	SDR11	220	98	86	22.7	10.0	2.46
250*160	SDR11	215	98	99	22.7	14.6	2.74
250*200	SDR11	220	99	99	22.7	18.2	3.09
250*225	SDR11	225	99	100	22.7	20.5	3.29
315*110	SDR11	235	107	85	28.6	10.0	3.95
315*160	SDR11	230	107	85	28.6	14.6	4.28
315*200	SDR11	230	107	95	28.6	18.2	4.29
315*250	SDR11	244	110	113	28.6	22.7	5.77
400*315	SDR11	380	180	170	39.5	30.5	15.58
450*400	SDR11	235	85	105	40.9	36.3	10.78
500*315	SDR11	280	120	120	31.5	20.5	13.58
630*500	SDR11	260	120	120	39.5	30.2	23.80



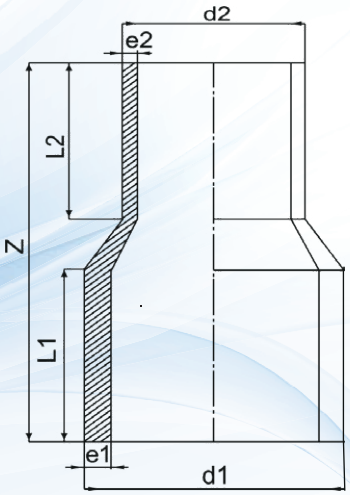



HDPE Spigot Fittings

Female Adaptor

d	R (inch)	SDR	L	Z	kg
20	1/2	SDR11	46	70	0.048
25	3/4	SDR11	45	71	0.076
32	1	SDR11	47	81	0.138
40	1 1/4	SDR11	56	100	0.307
50	1 1/5	SDR11	68	116	0.292
63	2	SDR11	68	116	0.478
75	2 1/2	SDR11	75	122	0.833
90	3	SDR11	80	142	1.140
110	4	SDR11	83	138	1.442

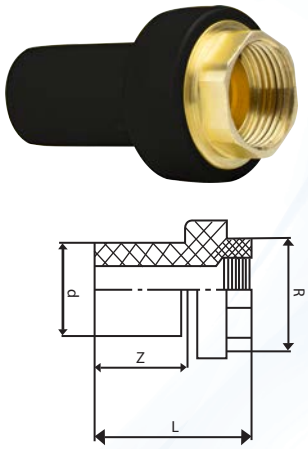

Male Adaptor

d	R (inch)	SDR	L	Z	kg
20	1/2	SDR11	45	83	0.084
25	3/4	SDR11	45	83	0.104
32	1	SDR11	47	96	0.175
40	1 1/4	SDR11	56	118	0.412
50	1 1/5	SDR11	56	119	0.512
63	2	SDR11	69	137	0.616
75	2 1/2	SDR11	80	155	0.820
90	3	SDR11	83	165	1.205
110	4	SDR11	85	168	1.800

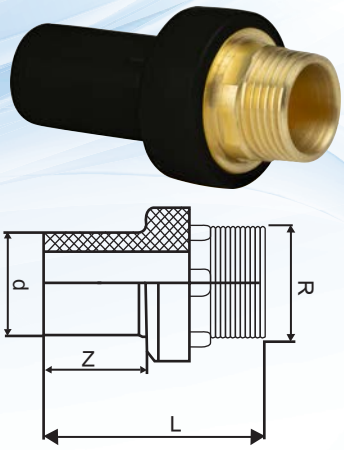



HDPE Spigot Fittings

PP COATED STEEL FLANGE SDR11

DIA	Da	Dp	K	D	d	B	n	Kg
20	20	29	65	95	14	15	4	0.63
25	25	34	75	102	14	15	4	0.72
32	32	42	85	115	14	16	4	0.41
40	40	51	100	140	18	16	4	0.59
50	50	62	110	150	18	16	4	0.66
63	63	78	125	165	18	18	4	0.88
75	75	92	145	185	18	18	4	1.50
90	90	108	160	200	18	20	8	1.57
110	110	125	180	220	18	20	8	1.70
125	125	135	180	220	18	20	8	1.38
140	140	158	210	250	18	22	8	1.95
160	160	178	240	285	22	22	8	3.00
180	180	188	240	285	22	22	8	2.25

All dimensions are in mm.

STANDARD: EN 1092-1 + A1 TYPE 1

MATERIAL: STEEL FLANGE

PRESSURE CLASS: PN16

Coated Steel flange



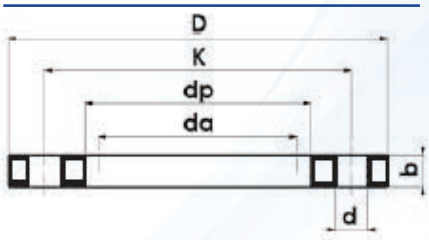

PP COATED STEEL FLANGE SDR17

DIA	Da	Dp	K	D	d	B	n	Kg
200	200	235	295	340	22	26	8	3.60
225	225	235	295	340	22	26	8	3.60
250	250	288	350	395	22	29	12	4.60
280	280	294	350	395	22	29	12	4.20
315	315	338	400	445	22	29	12	5.50
355	355	376	460	514	22	38	16	14.65
400	400	430	515	571	26	40	16	17.25
450	450	465	565	615	26	40	20	21.55
500	500	533	620	670	26	40	20	23.50
560	560	618	725	788	30	43	20	32.50
630	630	645	725	788	30	43	20	33.30

All dimensions are in mm.

STANDARD: EN 1092-1 + A1 TYPE 1

MATERIAL: STEEL FLANGE

PRESSURE CLASS: PN10

Coated Steel flange

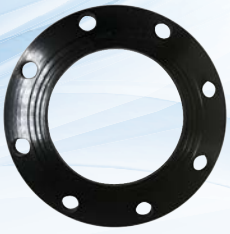

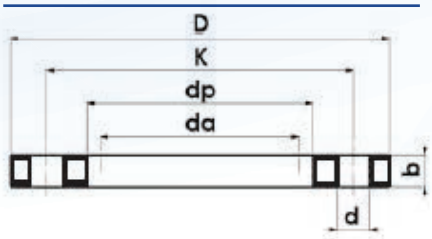



HDPE Spigot Fittings

D	SDR	L	Z	e
63	SDR11	0.13	0.40	5.8
75	SDR11	0.15	0.40	6.8
90	SDR11	0.18	0.40	8.2
110	SDR11	0.22	0.50	10.0
125	SDR11	0.25	0.50	11.4
140	SDR11	0.28	0.50	12.7
160	SDR11	0.32	0.50	14.6
180	SDR11	0.36	0.60	16.4
200	SDR11	0.40	0.60	18.2
225	SDR11	0.45	0.60	20.5
250	SDR11	0.50	0.60	22.7
280	SDR11	0.56	0.60	25.4
315	SDR11	0.63	0.70	28.6
355	SDR11	0.71	0.70	32.2
400	SDR11	0.80	0.80	36.3
450	SDR11	0.90	0.80	40.9
500	SDR11	1.00	0.90	45.4
560	SDR11	1.12	1.00	50.8
630	SDR11	1.26	1.00	57.2

Puddle Flange



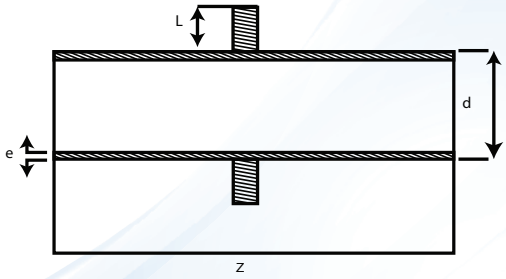

HDPE Pipe Repair Saddle Clamp for Leaking Pipe Repair
INJECTION SADDEL (BUTT-FUSION)
PE 100 SDR11

Size	Net Weight (without screw & Nuts)	Total Weight (with screw & Nuts)
63	0.24	0.48
75	0.3	0.6
90	0.62	1.24
110	0.78	1.58
160	1.46	2.9
200	4.8	6.9
250	3.64	7.28
315	5.2	10.4



All dimensions are in mm.
WEIGHT: KG
PRESSURE : PN16



HDPE Electrofusion Fittings

ϕ dn	SDR	L	A	ϕ d	kg
20	SDR 11	90	40	11.5	0.04
25	SDR 11	90	43	11.5	0.05
32	SDR 11	90	43	11.5	0.06
50	SDR 11	110	50	8.9	0.13
63	SDR 11	120	55	8.9	0.21
75	SDR 11	125	62	8.9	0.28
90	SDR 11	126	59	8.9	0.46
110	SDR 11	150	79	8.9	0.75
125	SDR 11	179	30	11.5	1.13
160	SDR 11	170	85	10.4	1.41
200	SDR 11	195	95	8.9	2.49
250	SDR 11	215	110	9.8	4.31
315	SDR 11	235	115	10.2	6.64
400	SDR 11	313	155	10.4	11.50

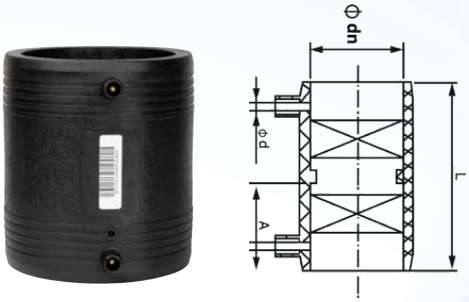

EF Coupler

ϕ dn	SDR	L	A	ϕ d	Kg
50	SDR 11	110	52	4.7	0.18
63	SDR 11	135	61	4.7	0.30
75	SDR 11	150	63	4.7	0.43
90	SDR 11	175	65	4.7	0.79
110	SDR 11	205	67	4.7	1.06
160	SDR 11	280	79	8.9	2.91
200	SDR 11	350	110	8.9	5.54
250	SDR 11	365	103	10.4	8.11

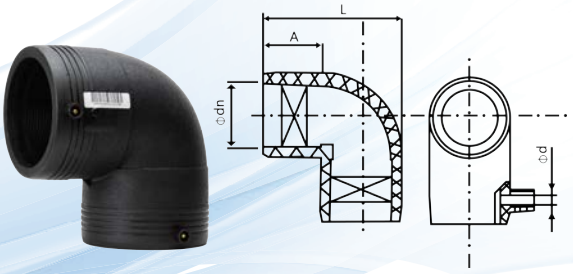

EF Elbow 90°

ϕ dn	SDR	L	A	B	ϕ d	Kg
32	SDR 11	122	46	51	11.5	0.10
50	SDR 11	150	52	55	8.9	0.23
63	SDR 11	169	57	62	8.9	0.38
75	SDR 11	189	62	82	8.9	0.60
90	SDR 11	209	67	82	8.9	0.96
110	SDR 11	239	74	85	8.9	1.38
160	SDR 11	370	90	95	9.8	3.52
200	SDR 11	370	100	105	9.8	6.33
250	SDR 11	410	110	128	10.9	9.72
315	SDR 11	520	120	150	10.9	17.76

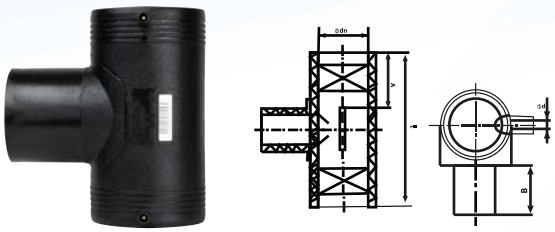

EF Equal Tee



HDPE Electrofusion Fittings

EF Reduced Tee

ϕdn x dn1	SDR	L	A	B	ϕ d	Kg
32 x 20	SDR 11	122	46	46	11.5	0.10
32 x 25	SDR 11	122	46	46	11.5	0.10
63 x 50	SDR 11	170	57	55	4.7	0.38
75 x 50	SDR 11	129	62	55	4.7	0.54
75 x 63	SDR 11	190	66	63	4.7	0.55
90 x 50	SDR 11	220	66	63	4.7	0.81
90 x 63	SDR 11	209	66	63	4.7	0.84
90 x 75	SDR 11	210	74	78	4.7	0.89
110 x 50	SDR 11	240	74	55	4.7	1.14
110 x 63	SDR 11	242	74	64	4.7	1.18
110 x 75	SDR 11	242	74	66	4.7	1.22
110 x 90	SDR 11	242	75	69	4.7	1.30
160 x 63	SDR 11	310	87	70	10.4	3.03
160 x 75	SDR 11	310	87	77	10.4	3.09
160 x 90	SDR 11	310	87	79	10.4	3.12
160 x 110	SDR 11	310	87	82	10.4	3.22
200 x 50	SDR 11	370	104	80	9.8	5.42
200 x 63	SDR 11	370	104	83	9.8	5.50
200 x 75	SDR 11	370	104	88	9.8	5.60
200 x 90	SDR 11	370	104	88	9.8	5.56
200 x 110	SDR 11	370	104	88	9.8	5.60
200 x 160	SDR 11	370	104	90	9.8	6.00
250 x 110	SDR 11	410	110	90	10.9	8.28
250 x 160	SDR 11	410	110	105	10.9	8.56
250 x 200	SDR 11	410	110	110	10.9	9.06
315 x 110	SDR 11	520	120	82	10.9	14.44
315 x 160	SDR 11	520	120	91	10.9	14.77
315 x 200	SDR 11	520	120	105	10.9	15.04
315 x 250	SDR 11	520	120	130	10.9	16.35



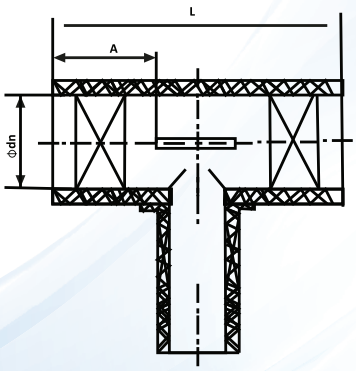

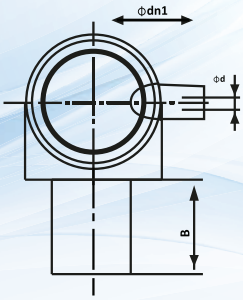

EF Elbow45°

ϕ dn	SDR	L	A	ϕ d	Kg
110	SDR 11	215	70	8.9	0.86
160	SDR 11	280	80	8.9	2.26
200	SDR 11	350	113	8.9	4.38



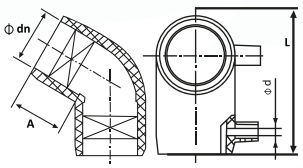



HDPE Electrofusion Fittings

ϕ dn x dn1	SDR	L	A	B	ϕ d	Kg
32 x 25	SDR 11	95	44	45	11.5	0.06
40x 32	SDR 11	95	40	40	11.5	0.08
63 x 32	SDR 11	124	58	52	11.5	0.20
63 x 40	SDR 11	128	57	60	11.5	0.22
63 X 50	SDR 11	130	63	53	8.9	0.19
75 X 50	SDR 11	145	62	65	8.9	0.25
75 X 63	SDR 11	140	62	63	8.9	0.27
90 X 50	SDR 11	150	65	64	8.9	0.38
90 X 63	SDR 11	150	65	65	8.9	0.40
90 X 75	SDR 11	146	69	65	8.9	0.41
110 X 50	SDR 11	150	68	65	8.9	0.50
110 X 63	SDR 11	150	68	65	8.9	0.52
110 X 75	SDR 11	155	68	68	8.9	0.56
110 X 90	SDR 11	150	68	66	8.9	0.63
160 X 63	SDR 11	165	78	63	8.9	1.02
160 X 75	SDR 11	165	78	64	8.9	1.05
160 X 90	SDR 11	165	78	77	8.9	1.14
160 X 110	SDR 11	165	78	70	8.9	1.15
200 X 63	SDR 11	180	93	68	8.9	1.83
200 X 75	SDR 11	176	93	68	8.9	1.84
200 X 90	SDR 11	164	93	68	8.9	1.90
200 X 110	SDR 11	190	95	82	8.9	1.99
200 X 160	SDR 11	188	95	82	8.9	2.10



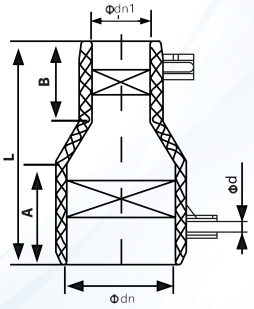

EF Reducer

ϕ dn	SDR	ϕ dn1	ϕ dn2	L	A	B	ϕ d	Kg
50	SDR 11	99	64	106	97	16	8.9	0.21
63	SDR 11	114	78	104	96	16.8	8.9	0.26
75	SDR 11	130	91.8	120	25	19	8.9	0.39
90	SDR 11	140	112.3	114	105	20.2	8.9	0.53
110	SDR 11	150	135	121	110	22	8.9	0.73
160	SDR 11	218	190	127	117	26	9.8	1.33
200	SDR 11	283	238	132	117	25	9.8	2.08
250	SDR 11	360	297	155	137	32	9.8	3.68
315	SDR 11	410	360	165	148	34	9.8	4.66



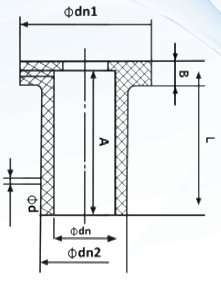

EF Stubend



HDPE Electrofusion Fittings

Tapping Tee

d1*d2	SDR	h	h1	L1	Z	Kg
63 x 20	SDR 11	180	97	76	129	0.712
75 x 20	SDR 11	186	104	76	129	0.801
90 x 20	SDR 11	194	112	76	129	0.772
110 x 20	SDR 11	204	122	76	129	0.890
160 x 20	SDR 11	229	147	76	129	0.820
200 x 20	SDR 11	249	168	76	129	0.947
250 x 20	SDR 11	274	192	76	129	0.981
315 x 20	SDR 11	306	224	76	129	1.051
63 x 25	SDR 11	180	97	75	128	0.706
75 x 25	SDR 11	186	104	75	128	0.795
90 x 25	SDR 11	194	112	75	128	0.765
110 x 25	SDR 11	204	122	75	128	0.884
160 x 25	SDR 11	229	147	75	128	0.814
200 x 25	SDR 11	249	168	75	128	0.942
250 x 25	SDR 11	274	192	75	128	0.974
315 x 25	SDR 11	306	224	75	128	1.045
63 x 32	SDR 11	180	79	75	129	0.706
75 x 32	SDR 11	186	104	75	129	0.794
90 x 32	SDR 11	194	112	75	129	0.765
110 x 32	SDR 11	204	122	75	129	0.882
160 x 32	SDR 11	229	147	75	129	0.812
200 x 32	SDR 11	249	168	75	129	0.940
250 x 32	SDR 11	274	192	75	129	0.973
315 x 32	SDR 11	306	224	75	129	1.044
75 x 50	SDR 11	233	121	100	160	1.113
90 x 50	SDR 11	241	129	100	160	1.084
110 x 50	SDR 11	251	139	100	160	1.201
160 x 50	SDR 11	276	164	100	160	1.131
200 x 50	SDR 11	296	184	100	160	1.260
250 x 50	SDR 11	321	209	100	160	1.291
315 x 50	SDR 11	353	241	100	160	1.363
90 x 63	SDR 11	241	129	97	157	1.146
110 x 63	SDR 11	251	139	97	157	1.263
160 x 63	SDR 11	276	164	97	157	1.194
200 x 63	SDR 11	296	184	97	157	1.322
250 x 63	SDR 11	321	209	97	157	1.353
315 x 63	SDR 11	353	241	97	157	1.425
110 x 90	SDR 11	251	139	110	165	1.500
160 x 90	SDR 11	276	164	110	165	1.550
200 x 90	SDR 11	296	184	110	165	1.600
250 x 90	SDR 11	321	209	110	165	1.650
315x 90	SDR 11	353	241	110	165	1.750
160 x 110	SDR 11	276	164	95	160	1.555
200 x 110	SDR 11	296	184	95	160	1.650
250 x 110	SDR 11	321	209	95	160	1.650
315 x 110	SDR 11	353	241	95	160	1.755



